Maxtell
LED Display Company

TU20 Pro

LED Playback Control Processor



Specifications

Change History

Document Version	Release Date	Description
V1.6.1	2025-10-31	Updated the media decoding specifications.
V1.6.0	2025-09-04	• Updated the features. • Updated playback performance. • Updated the descriptions for the applications. • Updated the media decoding specifications.
V1.5.3	2025-09-02	Updated the operating and storage temperatures.
V1.5.2	2025-02-20	Updated the sensor connector description.
V1.5.1	2024-11-07	Updated the dimensional drawings.
V1.5.0	2024-06-24	• Updated product introduction and certification details. • Added support for controlling the LED screen with a remote. • Updated the application diagram. • Updated the media decoding specifications.
V1.4.0	2024-03-25	Added media decoding specifications.

Introduction

The TU20 Pro is a playback control processor specially designed by Xi'an maxtell Tech Co., Ltd. (hereinafter referred to as maxtell) for indoor LED screens. It integrates the Android system and sending card functions into one unit, and allows third-party apps to run on it, featuring powerful interaction and playback control capabilities.

The TU20 Pro allows users to control the LED screen with a remote and supports wireless screen mirroring from Windows, macOS, iOS, and Android devices. It offers four different modes tailored for various applications, ensuring the best display quality for document presentations, video playback, and remote meetings.

The TU20 Pro has no requirements of redesigning or changing the screen structure and can be mounted on the wall or placed on a surface, allowing for quick environment setup and use. It can be widely used in corporate exhibition halls, meeting rooms, government and corporate educational halls, hotel lobbies, remote meetings and other LED single-screen application scenarios.

Certifications

CE, FCC, IC, MIC, KC, CB, RoHS, PSTI, NTRA, ANATEL

If the product does not have the relevant certifications required by the countries or regions where it is to be sold, please contact maxtell to confirm or address the problem. Otherwise, the customer shall be responsible for the legal risks caused or maxtell has the right to claim compensation.

Features

Inputs and Outputs

- 2x HDMI 1.3 inputs
- 3x USB 2.0 inputs for multimedia playback and function extension
- 6x Ethernet outputs, capacity up to 3.9 million pixels
- 2x audio outputs
  - 1x SPDIF digital audio output
  - 1x 3.5-mm audio output
- Output image scaling
  - Width range: 64 to 4096 pixels
  - Height range: 64 to 1920 pixels
  - Total device load capacity ≤ 3.9 million pixels

Note

When using the scaling function, the maximum load capacity is 3.9 million pixels, while the maximum pixel load for pixel-to-pixel display is 2.88 million. For any questions, please contact maxtell technical support.

System Functions

- Android 11 based desktop UI system, supporting third-party apps
- Screen drawing and commenting (To use this feature, please purchase a whiteboard activation code separately.)
- Wireless screen mirroring from multiple platforms

  Mirror from Windows, macOS, iOS and Android terminals.
- Working with the ViPlex Handy app to achieve reverse control

  The speaker can reversely control the LED screen via the terminal.
- Powerful processing performance
  - Quad-core 1.8 GHz ARM A55 processor
  - Support high-definition video decoding of H.264 4K@30Hz and H.265 4K@60Hz.
  - 4GB of RAM
  - 32GB of storage space
- Excellent playback performance

  Support playback of 2 streams of 4K video, 5 streams of 1080p video, 5 streams of 720p video, 8 streams of 480p video, or 10 streams of 360p video.

Note

Videos between 2K and 4K will be processed into 4K format.

- Playback control via different terminals
  - Intelligent control via mobile app: Install ViPlex Handy on your smartphone for program editing and publishing and screen control.
  - Convenient playback control via remote: Perform playback control of local programs and simple program editing on the screen.
  - USB playback: Support standalone playback, plug and play, copy and play.
- Flexible receiving card connection

  Blank spaces do not occupy load capacity, and there's no rectangular frame restrictions, allowing Ethernet port bandwidth to be fully utilized.

Note

For receiving card models that support this feature, please contact maxtell technical support.

- Eye comfort mode
- Dual Wi-Fi modes

  Allow for Wi-Fi and wireless hotspot connections at the same time.
- Image quality enhancement

  Improve the display effect from the three dimensions of image contrast, detail and color. So that the overall sense of image gradation is richer and more delicate; the edge details are clear and sharp; the color is bright and vivid.
- Effect adjustment

  Offer 4 display modes including standard, meeting, vivid and skin, and allow you to adjust the brightness, color temperature, saturation, contrast, etc.

Device Controls

- Gigabit Ethernet control port with TCP/IP protocol support
- Low-power (less than 0.5 W) mode during standby, and wakeup from standby via Infrared remote
- A relays can be connected for convenient power management of LED screen
- Intelligent control via mobile app

  Download and install VNNOX Care on your smartphone to easily configure the LED screen within just 10 minutes. The app also allows you to scan QR codes to set up screens, connect and adjust the topology using photos, and monitor the status of your devices. For specific operations, please contact maxtell technical support.
- Control the LED screen with a remote

- Bluetooth 5.1

  Can connect to up to 7 common peripherals such as the Bluetooth voice remote, Bluetooth mouse, Bluetooth keyboard, and Bluetooth sound system.

- Support peripherals such as camera, sound system and infrared touch frame.

Note

For supported peripheral device models, please contact maxtell technical support.

Appearance

Front Panel



Name	Description
Status LED	• Solid green: The device is running normally. • Off: The device is not running.
Standby button	• Press the button to power on/off. • Hold down the button to restart the device.
USB 2.0	Support a mouse, keyboard, USB drive and other common USB devices. • Supported image formats: *.jpg, *.bmp, *.png, *.gif, *.webp • Supported video formats: *.avi, *.mov, *.mkv, *.mp4, *.ts, *.flv, *.3gp, *.webm • Support FAT32 and NTFS file systems. Do not support exFAT or FAT16 file system.

Rear Panel

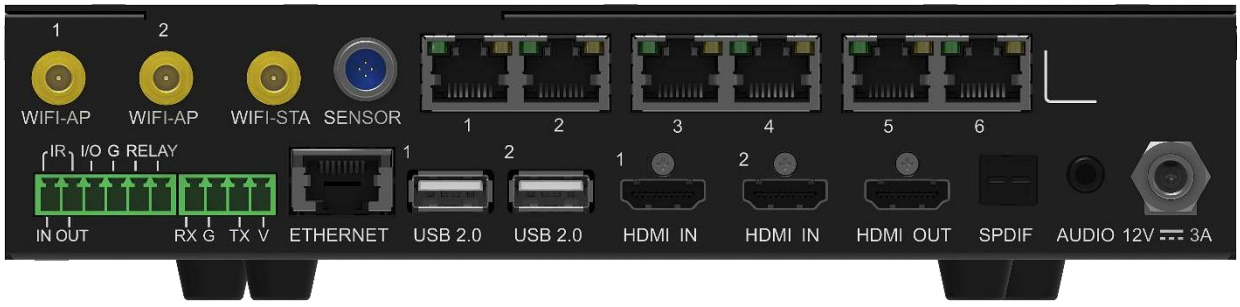

Type	Connector	Description
Input	HDMI IN 1–2	2x HDMI 1.3 (Type A) • Max resolution: 2048×1152@60Hz • Min resolution: 800×600@60Hz • Custom resolutions supported Width range: 800–4096 (Forced) Height range: 600–4096 (Forced) • Accepts 8-bit input sources. • YCbCr and RGB color space settings supported • Supported frame rates: 30 Hz, 50 Hz, 60 Hz • Do NOT support interlaced signal input. • Embedded audio supported • HDCP 1.4 (enabled by default) compliant, backwards compatible
	USB 2.0 1–2	2x USB 2.0 to support a mouse, keyboard, USB drive and other common USB devices • Supported image formats: *.jpg, *.bmp, *.png, *.gif, *.webp • Supported video formats: *.avi, *.mov, *.mkv, *.mp4, *.ts, *.flv, *.3gp, *.webm • Supported file systems: FAT32, NTFS; not supported: exFAT, FAT16
Output	1–6	6x RJ45 (1Gbps)
	HDMI OUT	Support output of standard 1080p video.
	AUDIO	3.5-mm audio output Note: 3-conductor audio connectors are supported.
	SPDIF	For digital fiber optic audio output
Control	ETHERNET	Connect to external network or to the NovaLCT software on the control PC.
	SENSOR	Sensor connector to connect to a light sensor or temperature and humidity sensor.
	Phoenix connector (4 pins)	1x RS232 central control connector (4 pins) to connect to the central control device • Baud rate: 115200 bps • Data bits: 8; stop bits: 1; no parity bit; no flow control
	Phoenix	• 1x IR IN (Reserved)

	connector (6 pins)	• 1x IR OUT (Reserved) • 1x I/O (Reserved) • 1x G: a grounding connector • 1x RELAY – Connect to a relay to control the switch on and off of the connected device. – Voltage: 30 V DC; max current: 3 A 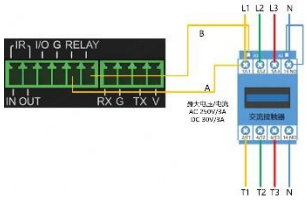 A, B: Relay switch signals The above wiring diagram is only for illustration purpose. For actual applications, please refer to the relevant AC contactor manual.
Antenna	Wi-Fi AP 1–2	Specifications: 2T2R. Connect to the Wi-Fi antenna and Bluetooth antenna.
	Wi-Fi STA	Specifications: 1T1R. Connect to the Wi-Fi antenna
Power	DC 12 V ± 10%	

Note

For the internal source (Android), the default resolution is 1920×1080 and the maximum resolution is 2048×1152 with a maximum width and height of 4096 pixels.

Dimensions

TU20 Pro

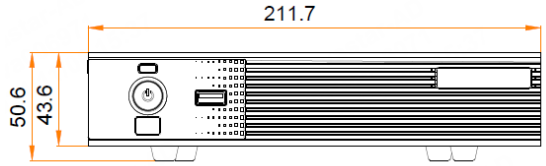

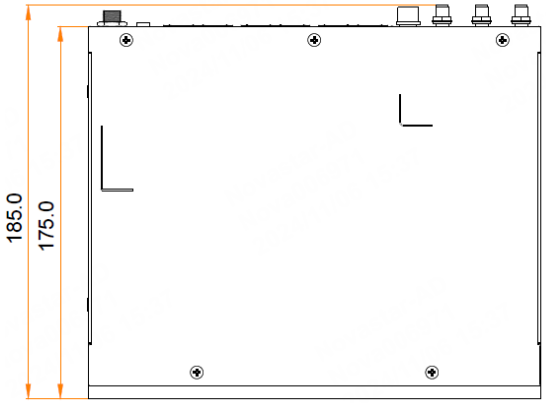

Tolerance: ±0.3 Unit: mm

TU20 Pro with Antennas and Hanging Brackets Installed

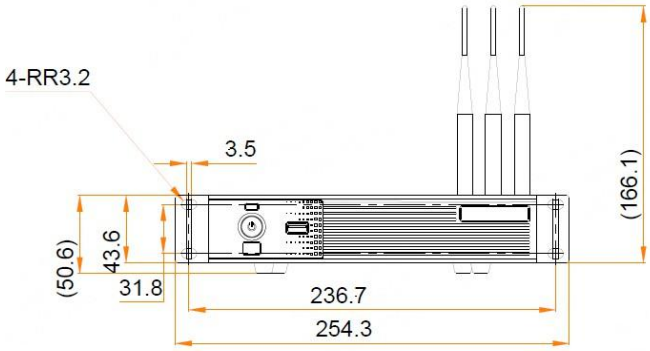

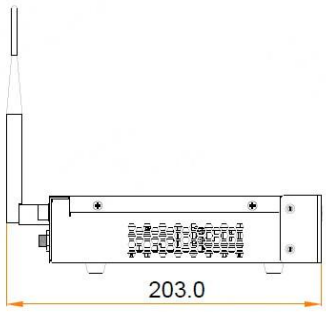

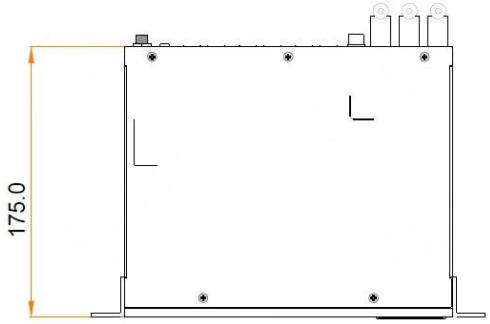

Tolerance: ±0.3 Unit: mm

Applications

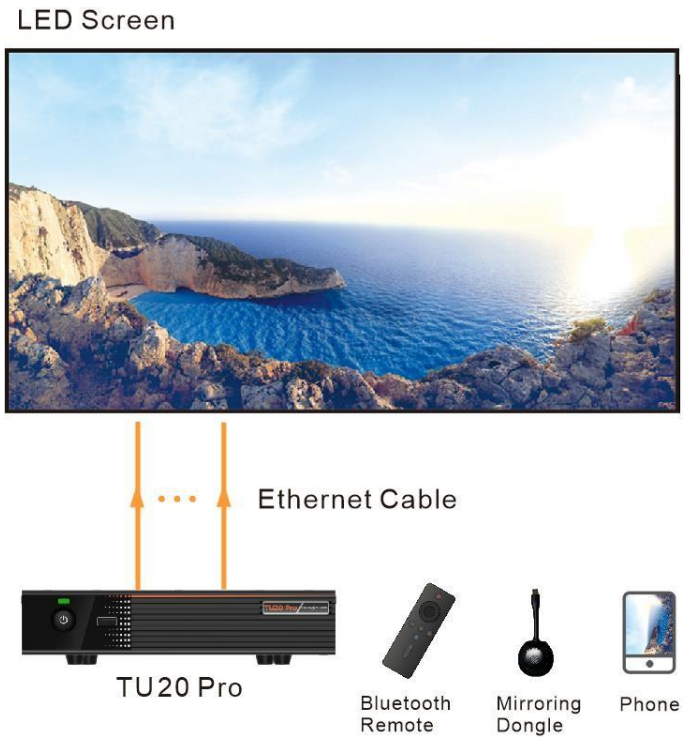

Note

- The TU20 Pro product package in this diagram is described in the packing list in the specifications table.
- The PTB1304 mirroring dongle (Type-C connector) is not included with the TU20 Pro product package and must be purchased separately. To use the PTB1304 dongle with the TU20 Pro, you will need to connect it using a Type-C to USB adapter (provided with the PTB1304).

Specifications

Electrical Specifications	Input voltage	DC 12V 3A, Negative Outside Positive Inside (power adapter input)
	Rated power consumption	21 W
Storage Space	RAM	4 GB
	Internal storage	32 GB
Operating Environment	Temperature	–20°C to +50°C
	Humidity	0% RH to 80% RH, non-condensing
Storage Environment	Temperature	–20°C to +70°C
	Humidity	0% RH to 95% RH, non-condensing
Physical Specifications	Dimensions	211.7 mm × 185.0 mm × 50.6 mm
	Net weight	1.12 kg
	Gross weight	2.9 kg Note: It is the total weight of the product, accessories, and packing materials packed according to the packing specifications.
Packing Information	Dimensions (L×W×H)	387 mm × 359 mm × 173 mm
	List	• 1x TU20 Pro • 1x Power adapter • 1x Bluetooth voice remote • 1x Ethernet cable • 1x HDMI cable • 3x Antennas • 2x Hanging brackets • 2x AAA batteries • 1x Certificate of Approval

The current and power consumption may vary depending on the product settings, usage environment and measuring status.

Optional Accessories

Item Code	Description	Note
710010020	Wireless mirroring activation code – 4-split screen	To use the 4-split screen feature, please purchase this item separately.
710010073	Wireless mirroring activation code – 9-split screen	To use the 9-split screen feature, please purchase this item separately.
710010027	Whiteboard activation code	To use the whiteboard feature, please purchase this item separately.
W01010277	MEEXUS_Dongle_PTB1304	To use the mirroring dongle, please purchase this item separately (it has a Type-C connector but can also be used with a USB port and comes with a Type-C to USB adapter included).

Note

The TU20 Pro comes with single screen mirroring. If you want 4-split screen mirroring or 9-split screen mirroring, please refer to the above table and purchase the item separately.

Media Decoding Specifications

Image

Type	Decoding	Resolution	Format	Note
JPEG	JFIF file format 1.02	64×64 pixels to 4096×2304 pixels	JPG, JPEG	Support for interlaced scan only Support for SRGB JPEG Support for Adobe RGB JPEG
BMP	BMP	64×64 pixels to 4096×2304 pixels	BMP	N/A
GIF	GIF	64×64 pixels to 1920×1088 pixels	GIF	Supported frame rate range: 1 fps to 30 fps
PNG	PNG	64×64 pixels to 4096×2304 pixels	PNG	N/A
WEBP	WEBP	64×64 pixels to 4096×2304 pixels	WEBP	N/A

Video

Codec	Resolution	Max Frame Rate	Max Bit Rate (Ideal Condition)	Format
H.265/HEVC	64×64 pixels to 4096×2304 pixels	60fps	100Mbps	MP4, MKV, MOV
H.264	64×64 pixels to 4096×2304 pixels	30fps	80Mbps	MP4, AVI, MKV, MOV
MPEG4	64×64 pixels to 1920×1088 pixels	30fps	38.4Mbps	MP4, AVI, MKV, MOV
VP9	64×64 pixels to 4096×2304 pixels	60fps	80Mbps	MKV, WEBM
VP8	64×64 pixels to 1920×1088 pixels	30fps	38.4Mbps	MKV, WEBM

Notes and Cautions

Notes for Battery

- The battery is not intended to be replaced.
- Disposal of a battery into fire or a hot oven, or mechanically crushing or cutting of a battery can result in an explosion.
- Leaving a battery in an extremely high temperature surrounding environment can result in an explosion or the leakage of flammable liquid or gas.
- A battery subjected to extremely low air pressure may result in an explosion or the leakage of flammable liquid or gas.

Notes for Installation

Installation scenario 1:

When the product needs to be installed on the rack, 4 screws at least M5*12 should be used to fix it. The rack for installation shall bear at least 5kg weight.

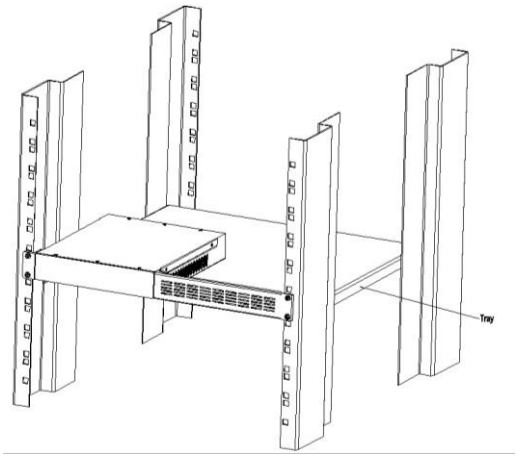

Note

The connecting piece is not included in the TU20 Pro product package. It needs to be purchased separately.

Installation scenario 2:

When the product needs to be hung on the wall, 2 screws at least M4*12 with an installation distance of 83mm should be used to fix it. The screws shall bear at least 10kg weight.

Other Notes and Cautions:

- Elevated Operating Ambient - If installed in a closed or multi-unit rack assembly, the operating ambient temperature of the rack environment may be greater than room ambient. Therefore, consideration should be given to installing the equipment in an environment compatible with the maximum ambient temperature (Tma) specified by the manufacturer.
- Reduced Air Flow – Installation of the equipment in a rack should be such that the amount of air flow required for safe operation of the equipment is not compromised.
- Mechanical Loading – Mounting of the equipment in the rack should be such that a hazardous condition is not achieved due to uneven mechanical loading.
- Circuit Overloading – Consideration should be given to the connection of the equipment to the supply circuit and the effect that overloading of the circuits might have on overcurrent protection and supply wiring. Appropriate consideration of equipment nameplate ratings should be used when addressing this concern.
- Reliable Earthing – Reliable earthing of rack-mounted equipment should be maintained. Particular attention should be given to supply connections other than direct connections to the branch circuit (e.g. use of power strips).

FCC Caution

Any changes or modifications not expressly approved by the party responsible for compliance could void the user's authority to operate the equipment.

This device complies with part 15 of the FCC Rules. Operation is subject to the following two conditions: (1) This device may not cause harmful interference, and (2) this device must accept any interference received, including interference that may cause undesired operation.

Note: This equipment has been tested and found to comply with the limits for a Class A digital device, pursuant to part 15 of the FCC Rules. These limits are designed to provide reasonable protection against harmful interference when the equipment is operated in a commercial environment. This equipment generates, uses, and can radiate radio frequency energy and, if not installed and used in accordance with the instruction manual, may cause harmful interference to radio communications. Operation of this equipment in a residential area is likely to cause harmful interference in which case the user will be required to correct the interference at his own expense.

Radiation Exposure Statement

This equipment complies with FCC radiation exposure limits set forth for an uncontrolled environment. This equipment should be installed and operated with minimum distance 20cm between the radiator and your body.

This transmitter must not be co-located or operating in conjunction with any other antenna or transmitter.

IC Statement

This device contains licence-exempt transmitter(s)/receiver(s) that comply with Innovation, Science and Economic Development Canada's licence-exempt RSS(s). Operation is subject to the following two conditions: (1) This device may not cause interference. (2) This device must accept any interference, including interference that may cause undesired operation of the device.

L'émetteur/récepteur exempt de licence contenu dans le présent appareil est conforme aux CNR d'Innovation, Sciences et Développement économique Canada applicables aux appareils radio exempts de licence. L'exploitation est autorisée aux deux conditions suivantes : 1) L'appareil ne doit pas produire de brouillage; 2) L'appareil doit accepter tout brouillage radioélectrique subi, même si le brouillage est susceptible d'en compromettre le fonctionnement.

This equipment complies with Industry Canada radiation exposure limits set forth for an uncontrolled environment.

Cet équipement est conforme à l'exposition aux rayonnements Industry Canada limites établies pour un environnement non contrôlé.

Radiation Exposure Statement

This equipment complies with Canada radiation exposure limits set forth for an uncontrolled environment. This equipment should be installed and operated with minimum distance 20cm between the radiator & your body.

Cetéquipementestconforme Canada limitesd'exposition aux radiations dans un environnement non contrôlé. Cetéquipementdoitêtreinstallé et utilisé à distance minimum de 20cm entre le radiateur et votre corps.

Others

This is Class A product. In a domestic environment, this product may cause radio interference in which case the user may be required to take adequate measures.

Maxtell
LED Display Company

Contact Information :

Jaipur Address

257, Malviya Apartment,
Nr. BJP Office Sardar Patel Marg,
C-Scheme, Jaipur, Rajasthan, 302001, India

Mumbai Address

Shop No. 10, 1/1 M.G. Suman Nagar, Opposite Vijay Sales,
Sion Trombay Road, Chembur, Mumbai – 400071

Phone

Jaipur Office - 0141 4012271
Mumbai Office - +91 92570 32390

Email

info@maxtellindia.com
sales@maxtellindia.com