Maxtell
LED Display Company

MXSM6

LED Playback Control Processor



Specifications

Change History

Document Version	Release Date	Description
V1.0.0	2023-05-16	First release

Introduction

The MXSM6 is a playback control processor specially designed by Xi'an Maxtell hereinafter referred to as Maxtell) for indoor LED screens. It integrates the Android system and sending card functions into one unit, and allows third-party apps to run on it, featuring powerful interaction and playback control capabilities.

The MXSM6 supports wireless screen mirroring from Windows, macOS, iOS and Android terminals. For a standard 1080p video, the mirroring transmission is at up to 60 fps with a system latency of less than or equal to 80 ms at 8 meters. For different application scenarios, it provides 4 modes to let the document presentation, video playback and remote meetings have the optimal display effect.

The MXSM6 has no requirements of redesigning or changing the screen structure and can be hung on the wall or placed on a surface, allowing for quick environment setup and use. It can be widely used in corporate exhibition halls, government and corporate educational halls, hotel lobbies, telemedicine consultation and other LED single-screen application scenarios.

Features

Inputs and Outputs

- 2x HDMI 1.3 inputs
- 3x USB 2.0 inputs for multimedia playback and function extension
- 6x Ethernet outputs, capacity up to 3.9 million pixels
- 2x audio outputs
  - 1x SPDIF digital audio output
  - 1x 3.5-mm audio output
- Output image scaling
  - Width range: 800 to 4096 pixels
  - Height range: 600 to 1920 pixels
  - Total device load capacity ≤ 3.9 million pixels

System Functions

- Android 11 based desktop UI system, supporting third-party apps
- Wireless screen mirroring from multiple platforms

  Mirror from Windows, macOS, iOS and Android terminals.
- Working with terminal app to control wireless screen mirroring
  - Secondary mirror: The speaker can reversely control the LED screen via the terminal.
  - Wireless snapshot: Take snapshots wirelessly via the terminal at any time to record the meeting details.
  - Wireless speech: The participants speak directly via the terminal microphone and the voice is transmitted wirelessly to the sound system of the LED display.
- Octacore 1.8 GHz ARM A55 + A55 Processor
- Playback control via different terminals
  - Intelligent control via mobile app: Install app on mobile phone to realize program editing and publishing and screen control.
  - Convenient playback control via remote: Perform playback control of local programs and simple program editing on the screen.
  - USB playback: Plug and play or copy and play. Support decoding of 4K HD videos in the HEVC, H.265, H.264 and other industry-standard coding formats.
- Dual Wi-Fi modes

  Allow for Wi-Fi and wireless hotspot connections at the same time.
- Effect adjustment

  Provide the standard, soft, theater and meeting scenario modes, and allow you to adjust the brightness, saturation, contrast, etc.
- Eye comfort mode
- Screen drawing and commenting

Device Controls

- Gigabit Ethernet control port with TCP/IP protocol support
- Low-power (less than 0.5 W) mode during standby, and wakeup from standby via Infrared remote
- A relays can be connected for convenient power management of LED screen
- Bluetooth 5.1

  Can connect to the Bluetooth voice remote, Bluetooth mouse, Bluetooth keyboard, Bluetooth sound system and other common peripherals.
- Compatible with the peripherals commonly used in a meeting, such as camera, sound system and laser pointer

Appearance

Front Panel



Name	Description
Power indicator (on the standby button)	• Solid white: The power supply is normal. • Off: The power is not supplied, or the power supply is abnormal.
Status LED	• Solid green: The device is running normally. • Off: The device is not running.
Standby button	• Press the button to power on or power off the device. • Hold down the button to restart the device.
USB 2.0	Support a mouse, keyboard, USB drive and other common USB devices. • Supported image formats: *webp.jpg, *.bmp, *.png,gif • Supported video formats: *.avi, mpeg-1/2,mpeg-4,.mpg, *.vob,goggle Vp8,h263,vc, *.mov, *.mkv, *.rmvb, *.mp4, *.ts, *.flv,H264/avc,mvc,h.265/hevc, • Support FAT32 and NTFS file systems. Do not support exFAT or FAT16 file system.

Rear Panel

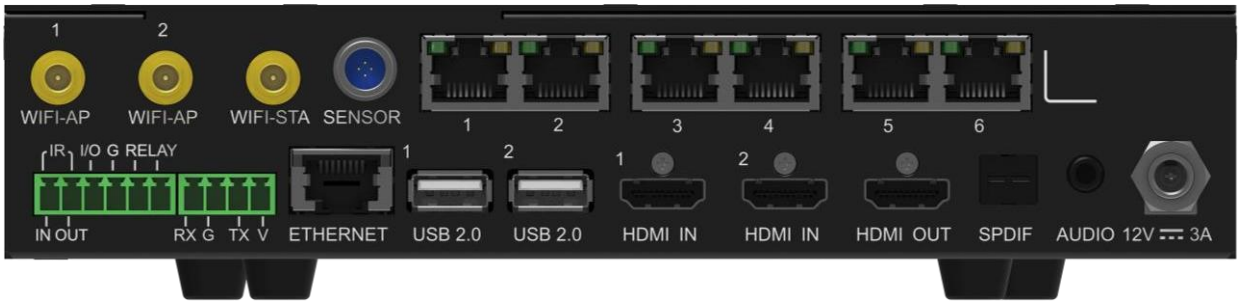

Type	Connector	Description
Input	HDMI IN 1–2	2x HDMI 1.3 (Type A) • Max resolution: 2048×1152@60Hz • Min resolution: 800×600@60Hz • Custom resolutions supported Width range: 800–3840 pixels (Forced) Height range: 600–3840 pixels (Forced) • Supported frame rates: 30 Hz, 50 Hz, 60 Hz • Do NOT support interlaced signal input. • HDCP 1.4 compliant, backwards compatible
	USB 2.0 1–2	2x USB 2.0 to support a mouse, keyboard, USB drive and other common USB devices • Supported image formats: *webp.jpg, *.bmp, *.png,gif • Supported video formats: *.avi, mpeg-1/2,mpeg-4,.mpg, *.vob,goggle Vp8,h263,vc, *.mov, *.mkv, *.rmvb, *.mp4, *.ts, *.flv,H264/avc,mvc,h.265/hevc, • Supported Audio formats :FLAC, AMR, AAC,WAV,OGG, MIDI, MPEG, Windows Media Audio(WMA) • Supported file systems: FAT32, NTFS; not supported: exFAT, FAT16
Output	1–6	6x RJ45 (1Gps) • In pixel-to-pixel output mode: load capacity up to 2.6 million pixels • When scaling function enabled: load capacity up to 3.9 million pixels (max width: 4096 pixels; max height: 1920 pixels)
	HDMI OUT	Support output of standard 1080p videos only.
	AUDIO	3.5-mm audio connector
	SPDIF	For digital fiber optic audio output
Control	ETHERNET	Connect to external network or to the NovaLCT software on the control PC.
	SENSOR	1x sensor connector to connect to the light sensor or temperature sensor
	Phoenix connector (4 pins)	1x RS232 central control connector (4 pins) to connect to the central control device • Baud rate: 115200 bps • Data bits: 8; stop bits: 1; no parity bit; no flow control
	Phoenix connector (6 pins)	• 1x IR IN Support the learning of the infrared control instructions. • 1x IR OUT Support the programmable infrared control. • 1x I/O – Trigger the execution of various function requirements via programming. – Support the input and output modes. – Input and output I/O voltage: 3.3 V • 1x RELAY – Connect to a relay to control the switch on and off of the connected device. – Voltage: 30 V DC; max current: 3 A • 1x GND A grounding connector
Antenna	Wi-Fi AP 1–2	Specifications: 2T2R. Connect to the Wi-Fi antenna and Bluetooth antenna.
	Wi-Fi STA	Specifications: 1T1R. Connect to the Wi-Fi antenna
Power	DC 12 V ± 10%	

Dimensions

MXSM6

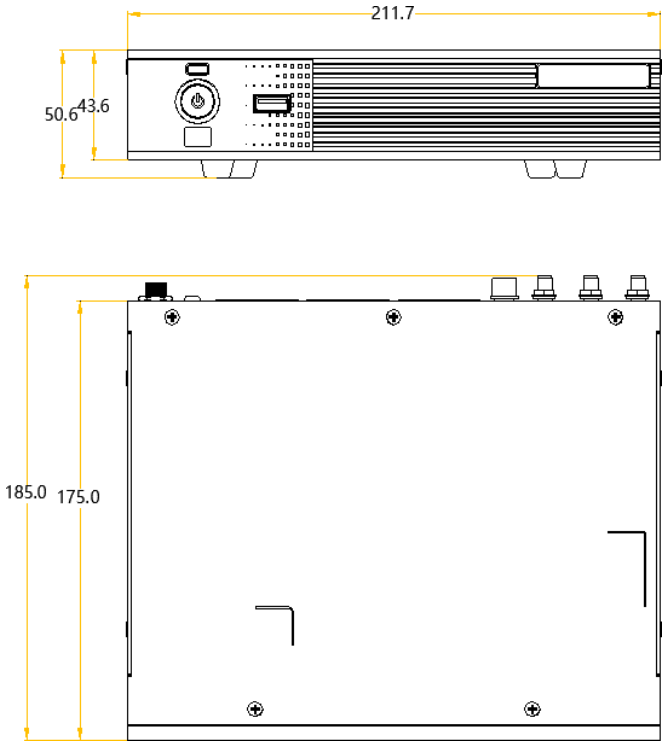

Tolerance: ±0.3 Unit: mm

MXSM6 with Antennas and Hanging Brackets Installed

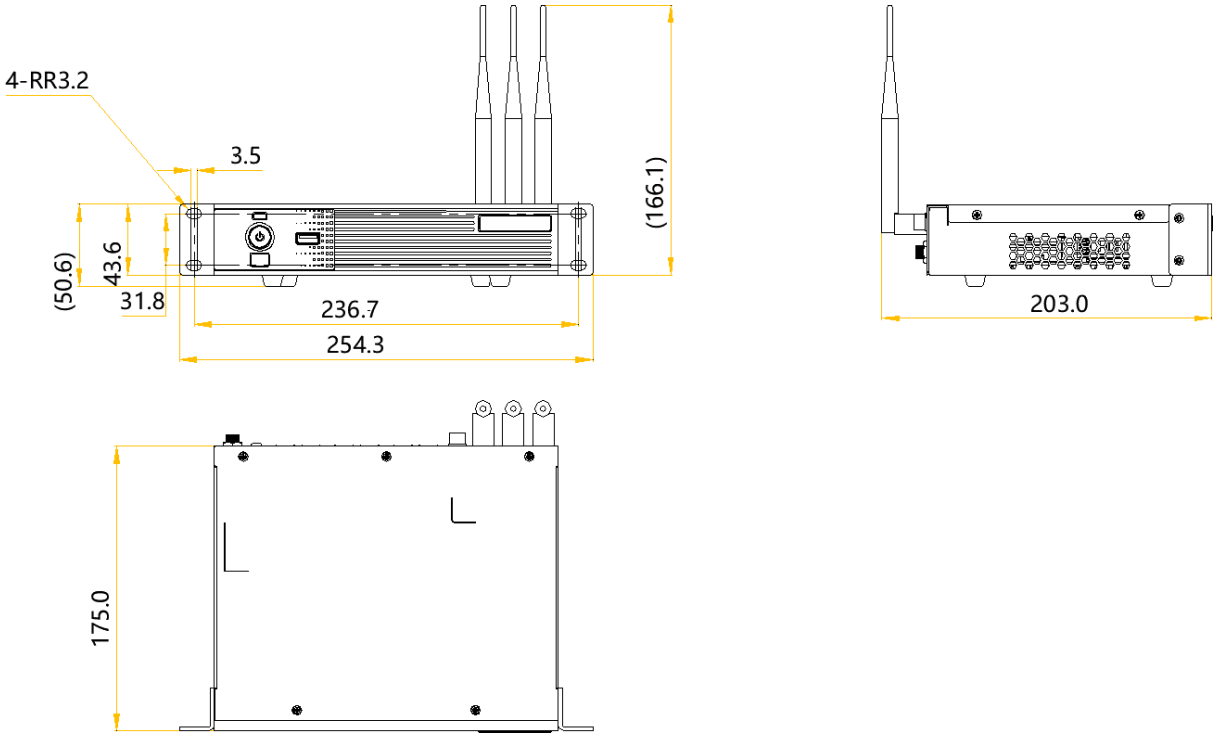

Tolerance: ±0.3 Unit: mm

Applications

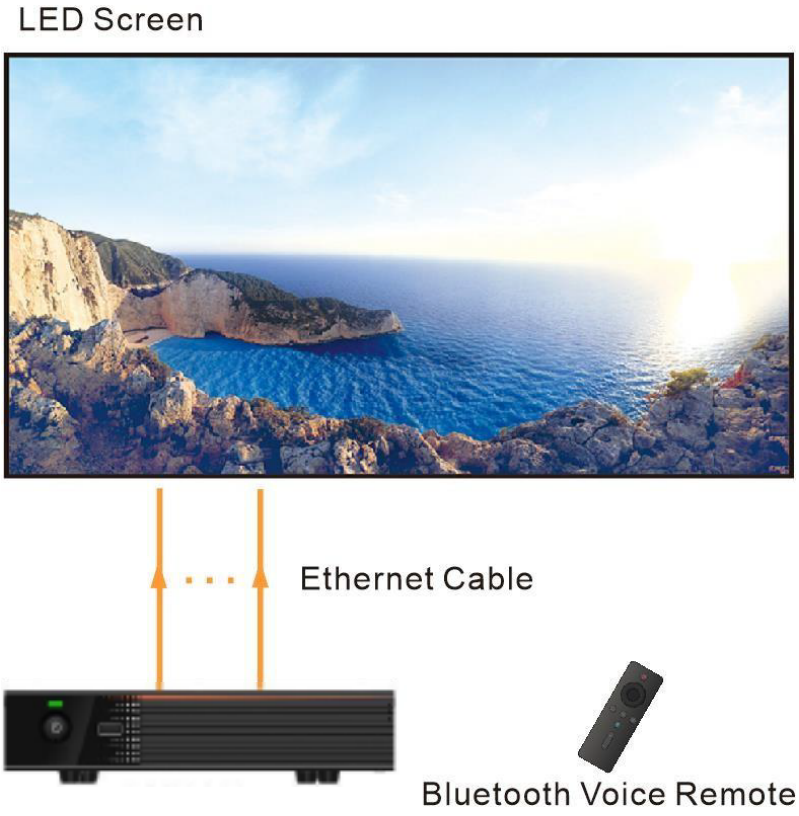

Note

The MXSM6 product package in this diagram is described in the packing list in the specifications table.

Specifications

Electrical Specifications	Input voltage	DC 12V 3A, Negative Outside Positive Inside (power adapter input)
	Rated power consumption	21 W
Storage Space	RAM	2 GB
	Internal storage	32 GB
Operating Environment	Temperature	–20°C to +50°C
	Humidity	0% RH to 80% RH, non-condensing
Storage Environment	Temperature	–30°C to +80°C
	Humidity	0% RH to 95% RH, non-condensing
Physical Specifications	Dimensions	211.7 mm × 185.0 mm × 50.6 mm
	Net weight	1.12 kg
	Gross weight	2.9 kg Note: It is the total weight of the product, accessories, and packing materials packed according to the packing specifications.

Packing Information	Dimensions (L×W×H)	387 mm × 359 mm × 173 mm
	List	• 1x MXSM6 • 1x Power adapter • 1x Bluetooth voice remote • 1x Ethernet cable • 1x HDMI cable • 3x Antennas • 2x Hanging brackets • 1x Certificate of Approval

The current and power consumption may vary depending on the product settings, usage environment and measuring status.

Notes and Cautions

Notes for Battery

- The battery is not intended to be replaced.
- Disposal of a battery into fire or a hot oven, or mechanically crushing or cutting of a battery can result in an explosion.
- Leaving a battery in an extremely high temperature surrounding environment can result in an explosion or the leakage of flammable liquid or gas.
- A battery subjected to extremely low air pressure may result in an explosion or the leakage of flammable liquid or gas.

Notes for Installation

Installation scenario 1:

When the product needs to be installed on the rack, 4 screws at least M5*12 should be used to fix it. The rack for installation shall bear at least 5kg weight.

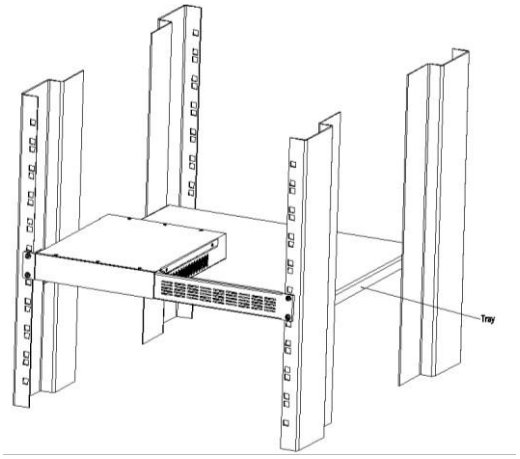

Note

The connecting piece is not included in the MXSM6 product package. It needs to be purchased separately.

Installation scenario 2:

When the product needs to be hung on the wall, 2 screws at least M4*12 with an installation distance of 83mm should be used to fix it. The screws shall bear at least 10kg weight.

Other Notes and Cautions:

- Elevated Operating Ambient - If installed in a closed or multi-unit rack assembly, the operating ambient temperature of the rack environment may be greater than room ambient. Therefore, consideration should be given to installing the equipment in an environment compatible with the maximum ambient temperature (Tma) specified by the manufacturer.
- Reduced Air Flow – Installation of the equipment in a rack should be such that the amount of air flow required for safe operation of the equipment is not compromised.
- Mechanical Loading – Mounting of the equipment in the rack should be such that a hazardous condition is not achieved due to uneven mechanical loading.
- Circuit Overloading – Consideration should be given to the connection of the equipment to the supply circuit and the effect that overloading of the circuits might have on overcurrent protection and supply wiring. Appropriate consideration of equipment nameplate ratings should be used when addressing this concern.
- Reliable Earthing – Reliable earthing of rack-mounted equipment should be maintained. Particular attention should be given to supply connections other than direct connections to the branch circuit (e.g. use of power strips).

Maxtell
LED Display Company

Contact Information :

Jaipur Address

257, Malviya Apartment,
Nr. BJP Office Sardar Patel Marg,
C-Scheme, Jaipur, Rajasthan, 302001, India

Mumbai Address

Shop No. 10, 1/1 M.G. Suman Nagar, Opposite Vijay Sales,
Sion Trombay Road, Chembur, Mumbai – 400071

Phone

Jaipur Office - 0141 4012271
Mumbai Office - +91 92570 32390